VKBA 3569

Technical Bulletin - July 2009

Front Wheel: AUDI A2, SEAT Cordoba, Ibiza IV-V, SKODA Fabia, Roomster, VW Fox, Polo.

HBU 2.1 – a bearing design needing special tools

A specific wheel bearing design called HBU 2.1 is becoming more and more common on the market. This bearing design requires the use of special tools for dismounting and especially mounting the bearing on the vehicle. SKF has no tools in the range for the moment but a variety of tools are offered by different tool manufacturers and some are also designed and used by OE garages.

Here is some information about this specific bearing.

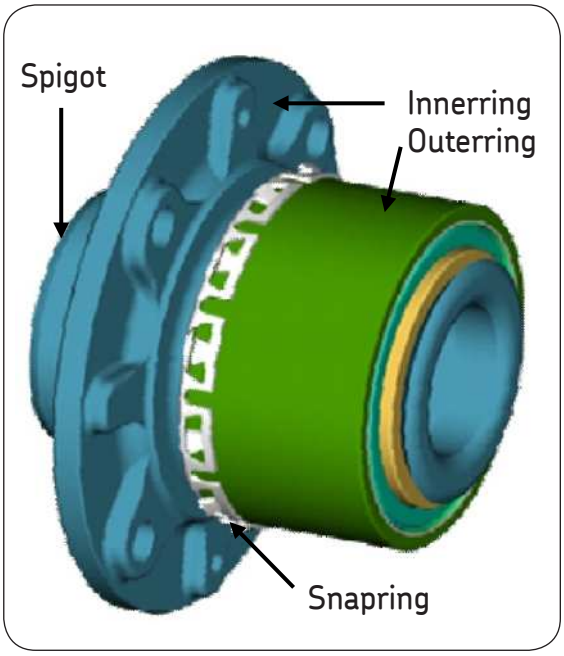

The characteristics of an HBU 2.1

- It is a pre-assembled unit, combining bearing with the hub
- The rotating inner ring flange, with threaded holes or studs, has a spigot designed to centre and mount brake disc and wheel
- The bearing can have a magnetic impulse ring
- The bearing comes with or without a snap ring

Advantages with a HBU 2.1

- Increased stiffness
- Lower run-out
- Reduced number of components
- Reduction of pre-load spread

Basic fitting instructions for HBU 2.1

Always use the proper tools for all steps.

1. Remove the old bearing from the steering knuckle
2. Carefully clean the surface in the steering knuckle and make sure there is no damages
3. Install the new HBU 2.1 pressing on the outer ring side of the bearing

The critical part is that the mounting pressure must be put on the outer ring. Pressing on the inner ring – the flange – will seriously damage the bearing and lead to premature failure.

It is important to use proper tools as well as follow the mounting steps.

Warning! Never try to reuse the old bearing after dismounting it!

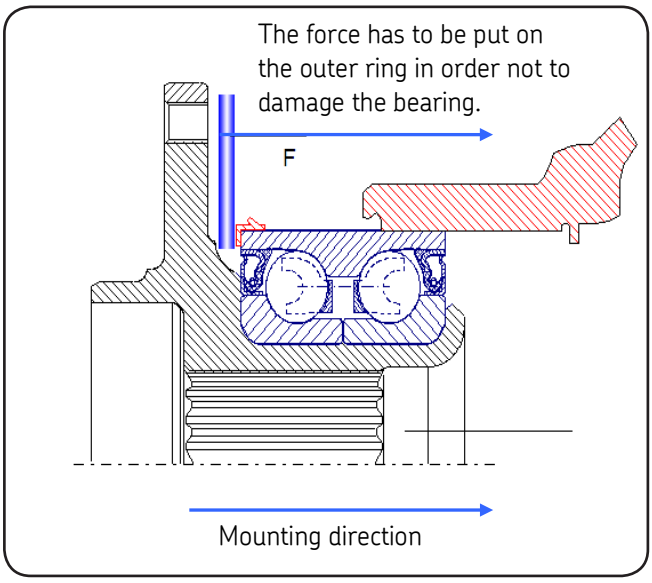

Bearing HBU 2.1 and surrounding components

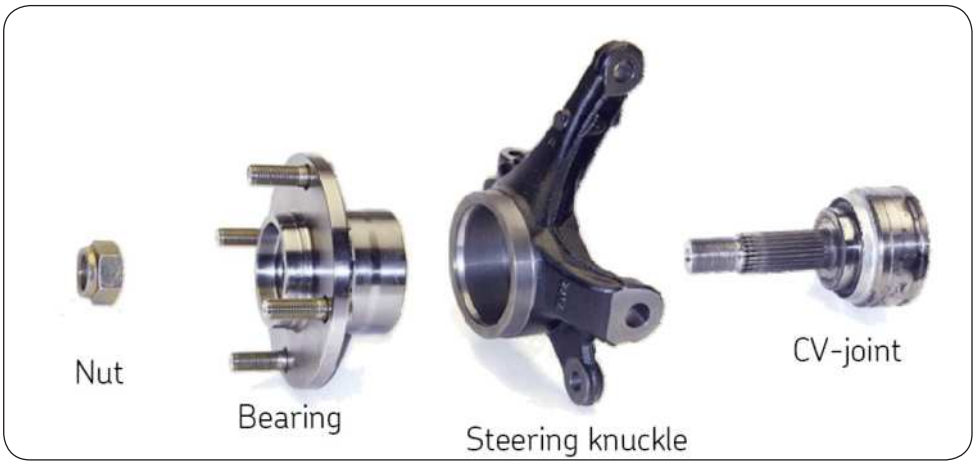

® SKF is a registered trademark of the SKF Group.

© SKF Group 2009
The contents of this publication are the copyright of the publisher and may not be reproduced (even extracts) unless written permission is granted. Every care has been taken to ensure the accuracy of the information contained in this publication but no liability can be accepted for any loss or damage whether direct, indirect or consequential arising out of the use of the information contained herein.